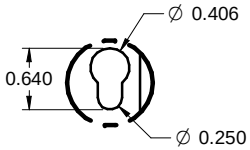

DETAIL A

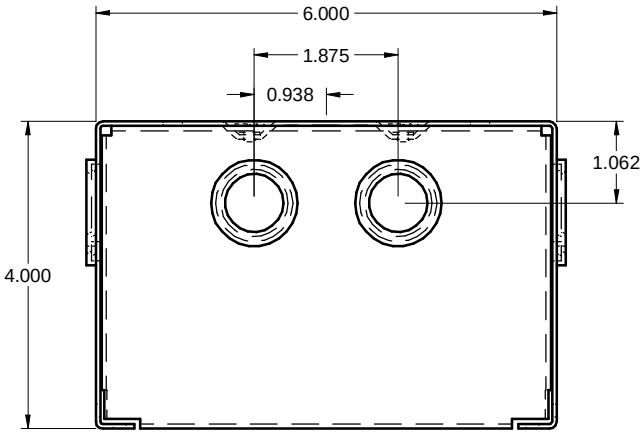

TOP / DESSUS

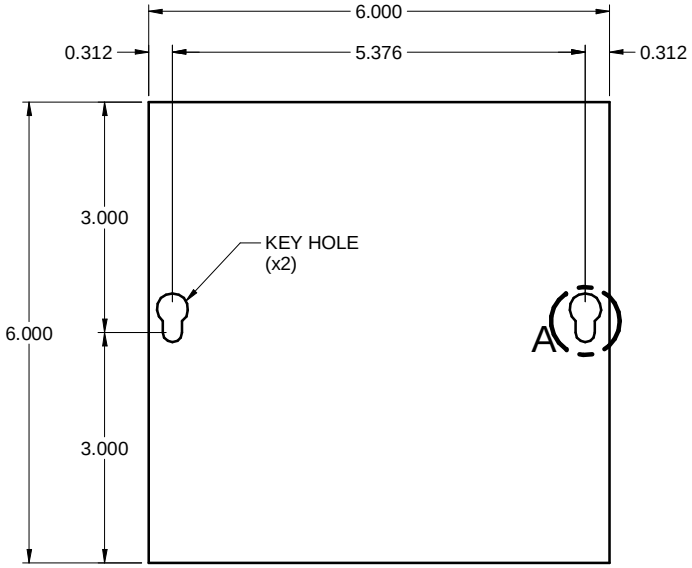

COVER / COUVERCLE

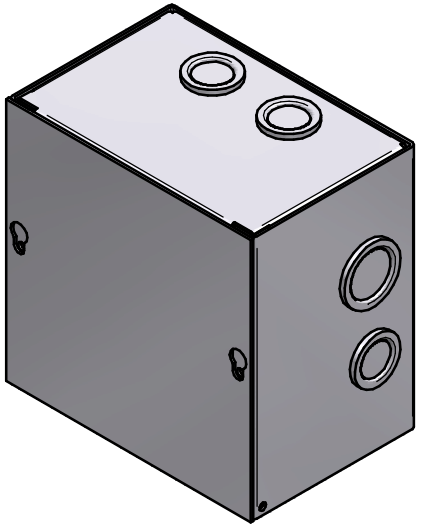

DUKO060604
STEEL / ACIER

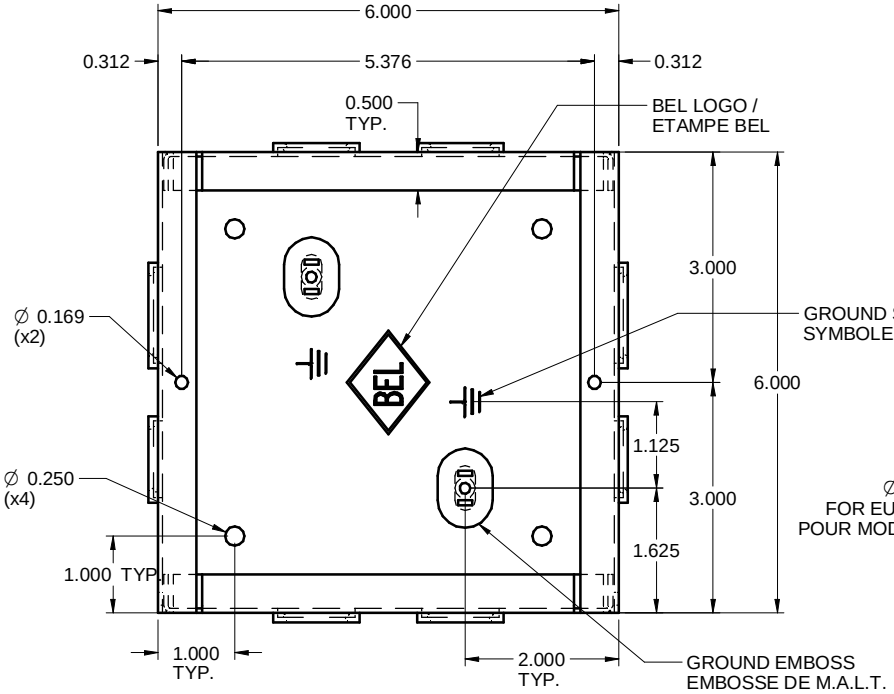

FRONT WITHOUT COVER
FACE SANS COUVERCLE

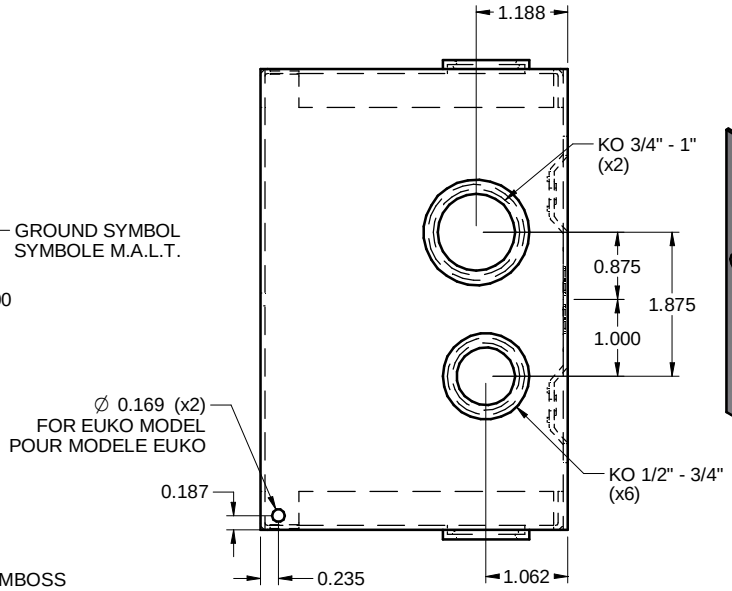

SIDE / CÔTÉ

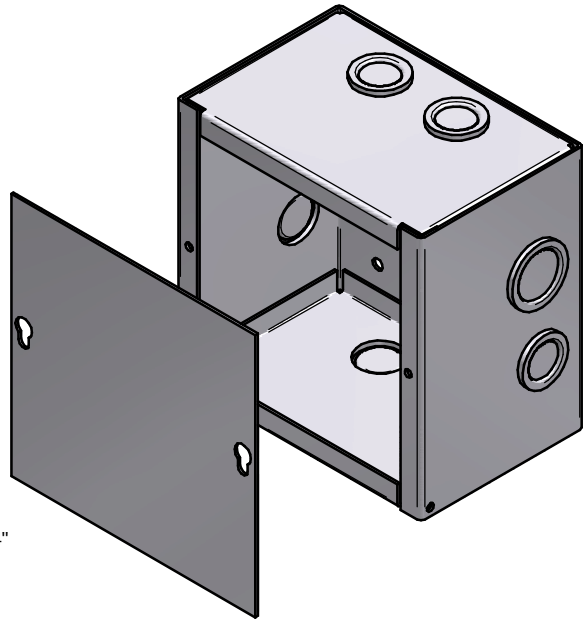

www.belproducts.com