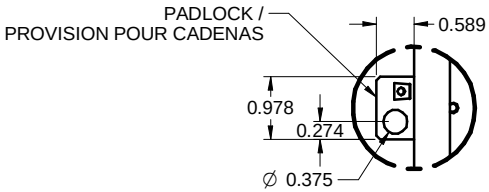

DETAIL A

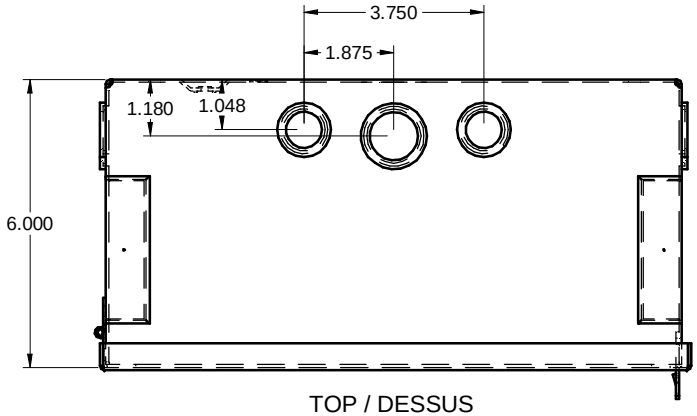

TOP / DESSUS

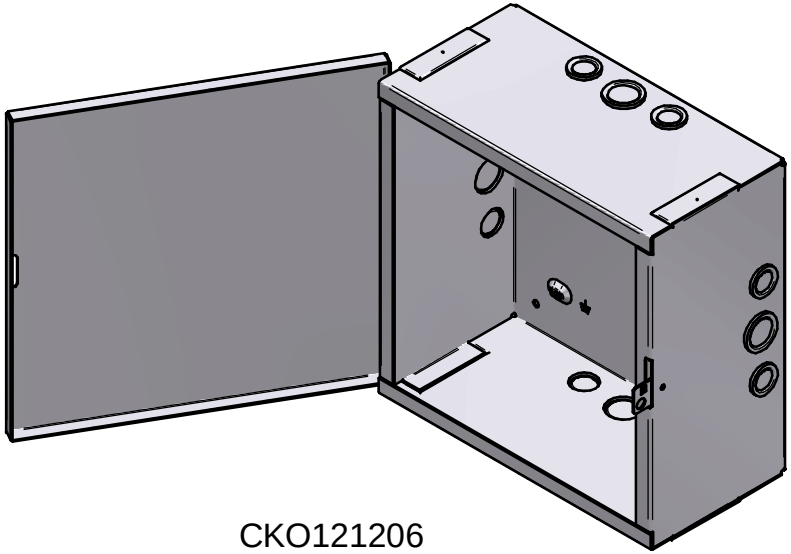

CKO121206
STEEL / ACIER

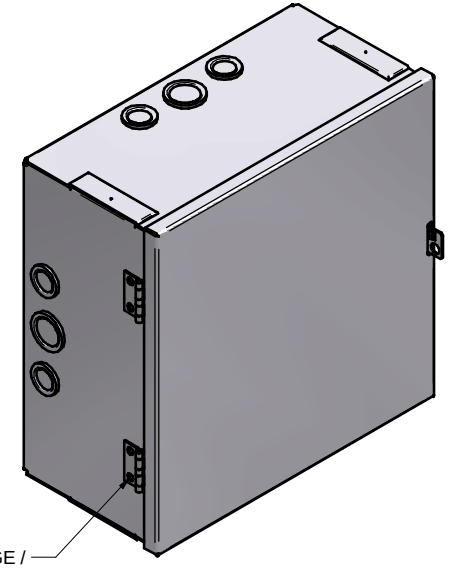

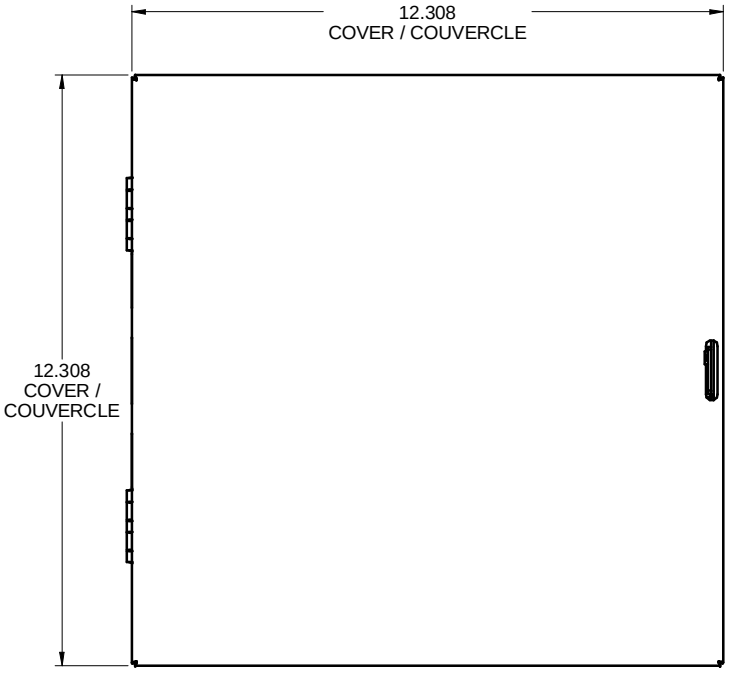

FRONT / FACE

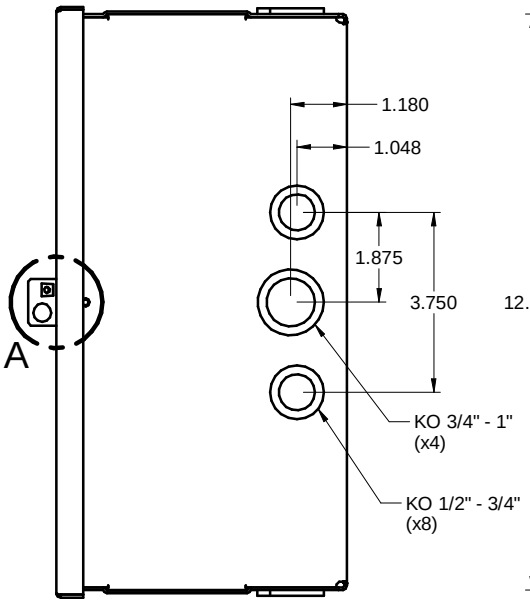

SIDE / CÔTÉ

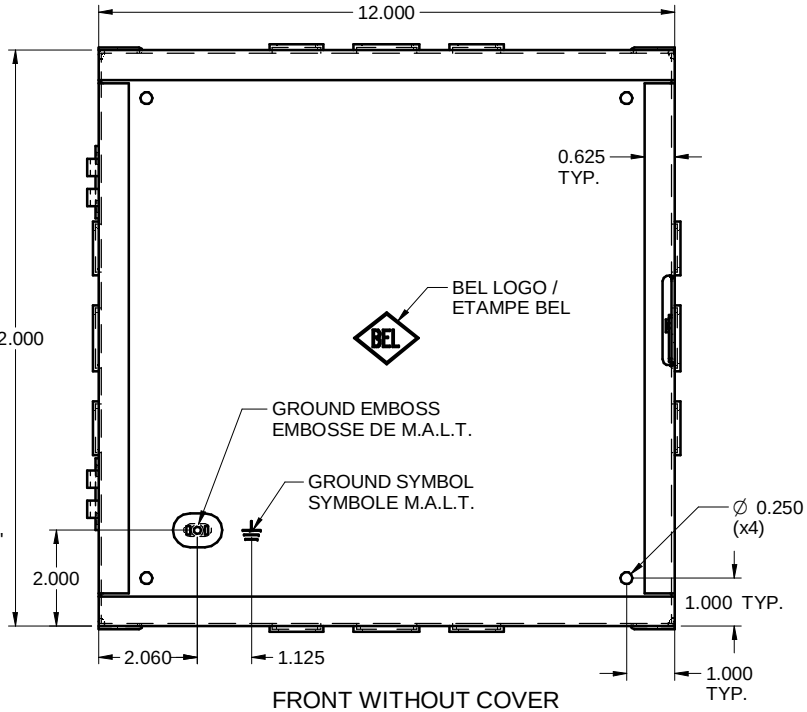

FRONT WITHOUT COVER
FACE SANS COUVERCLE

www.belproducts.com