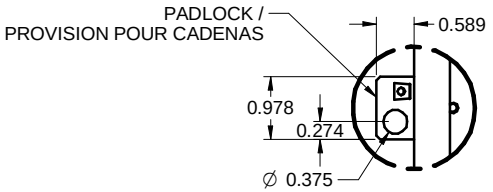

DETAIL A

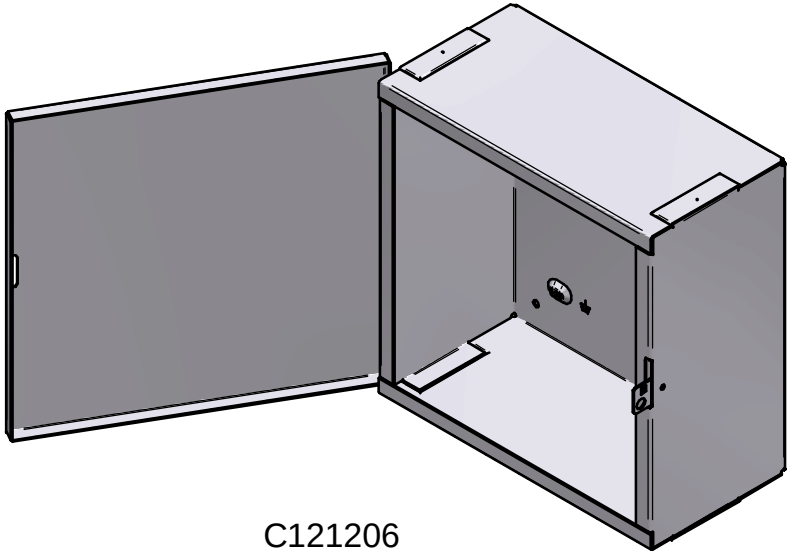

C121206
STEEL / ACIER

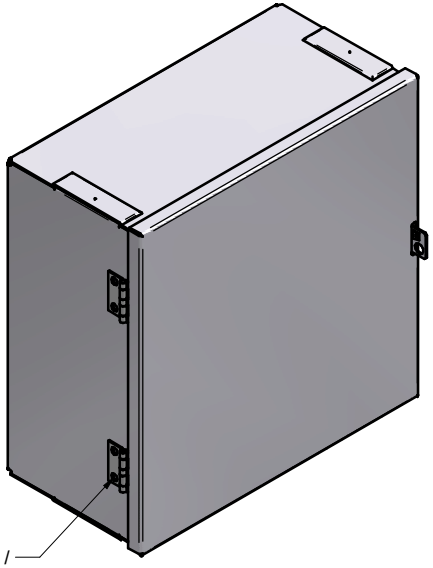

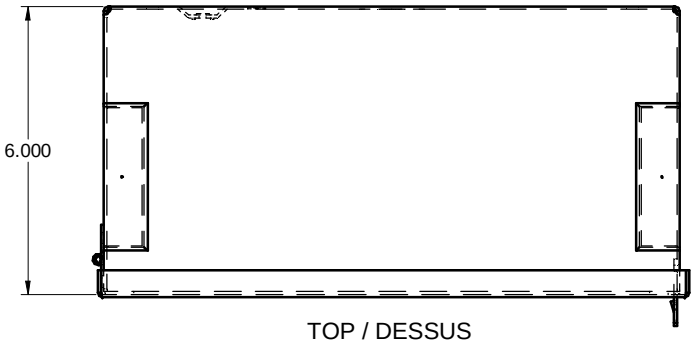

TOP / DESSUS

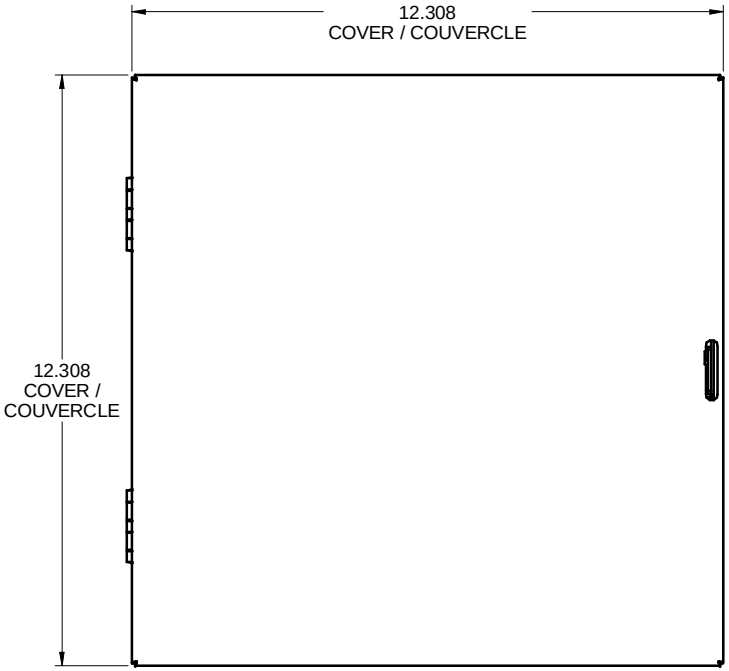

FRONT / FACE

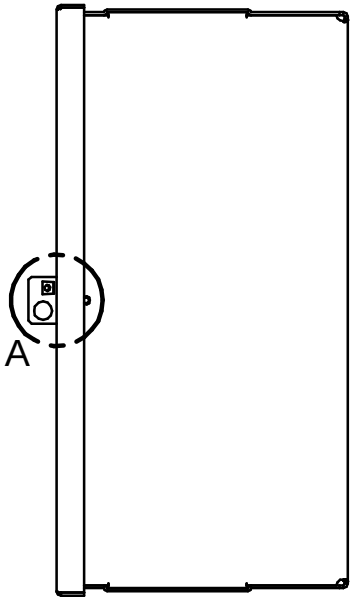

SIDE / CÔTÉ

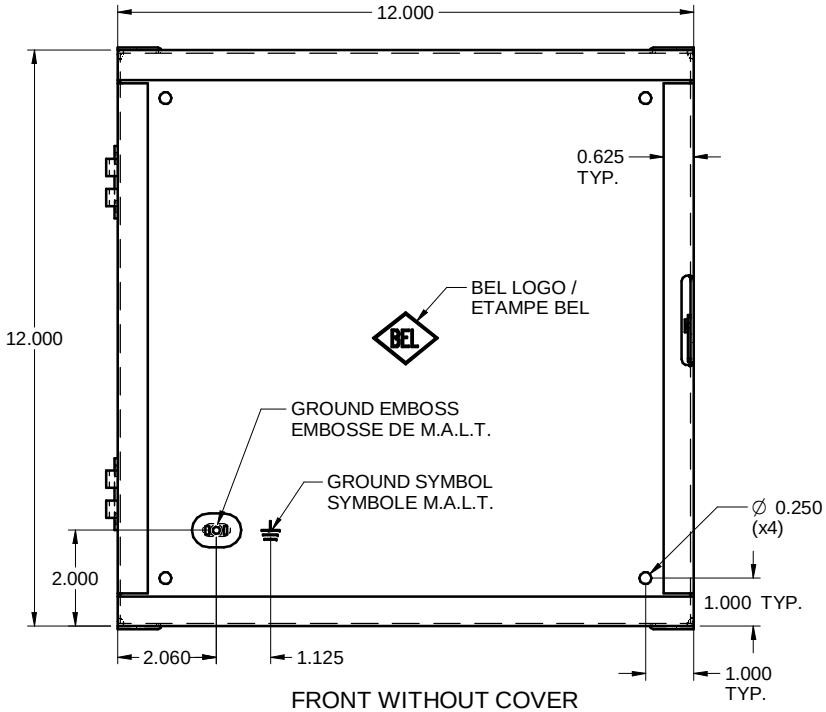

FRONT WITHOUT COVER
FACE SANS COUVERCLE

www.belproducts.com