AWK1711
STEEL AND STAINLESS STEEL
ACIER ET ACIER INOXYDABLE

www.belproducts.com

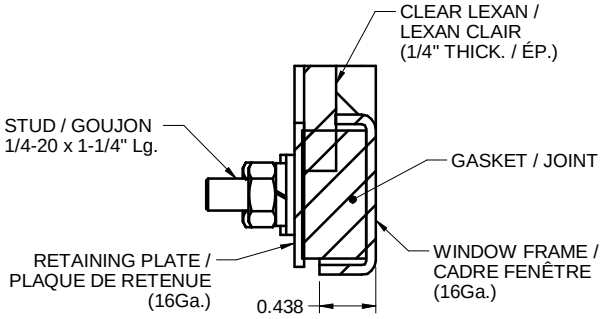

SECTION B-B

TOP / DESSUS

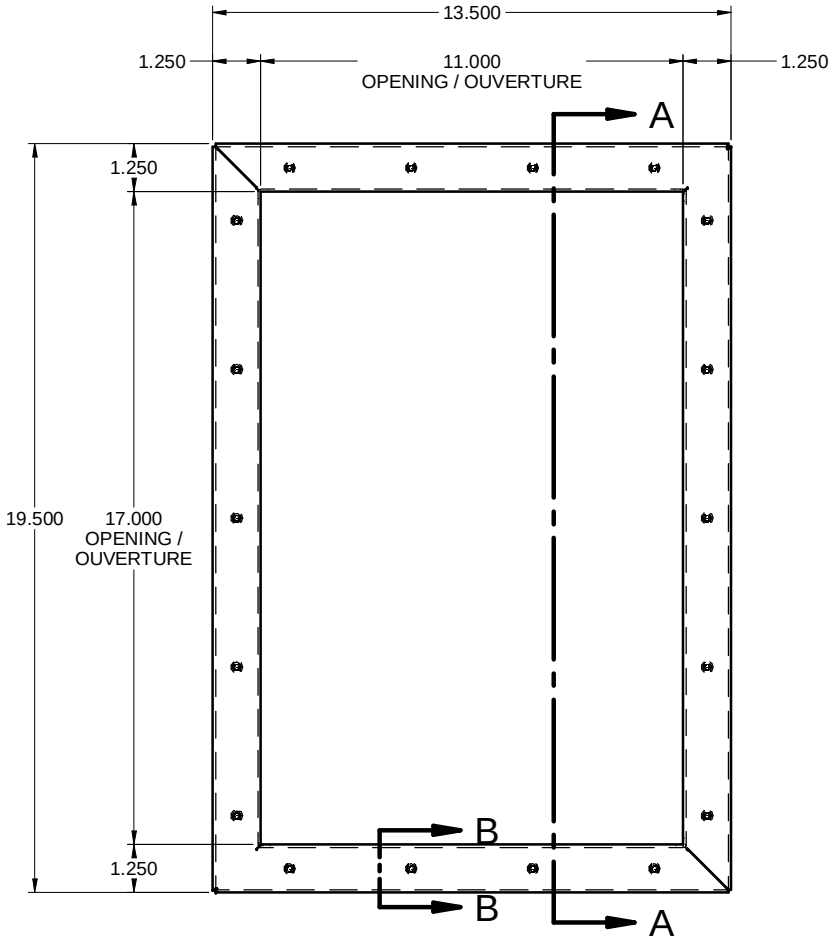

FRONT / FACE
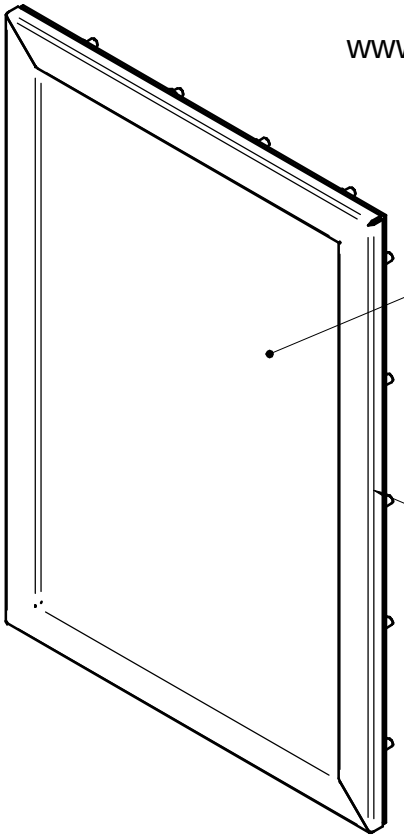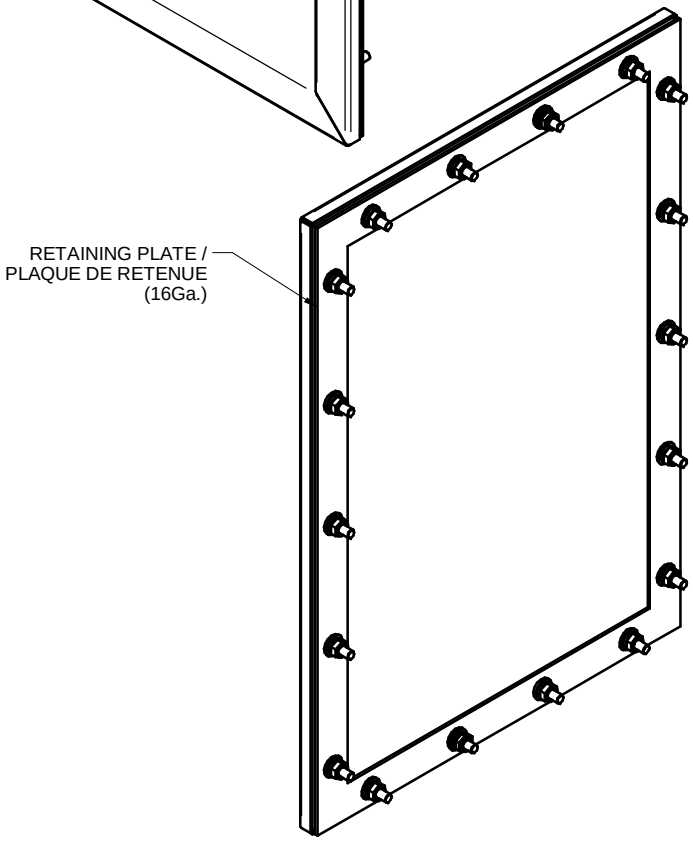
SECTION A-A